# RF CONNECTORS / MINI UHF

| RMUPC01R | DIMENSIONS | RMUJC01 | DIMENSIONS |
|---|---|---|---|
| | 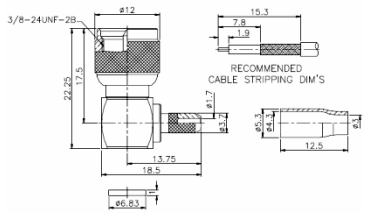  | | 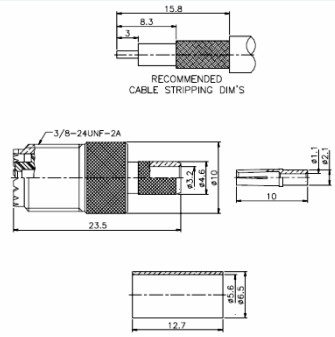  |
| MINI UHF PLUG<br>CRIMP<br>RIGHT ANGLE | | MINI UHF JACK<br>CRIMP<br>STRAIGHT | |

| RMUPC01 | DIMENSIONS | RMUJCB01 | DIMENSIONS |
|---|---|---|---|
| | 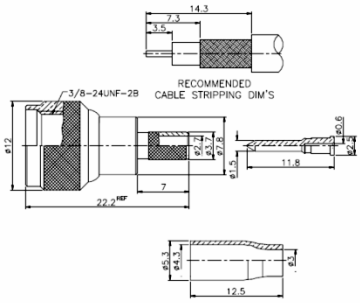  | | 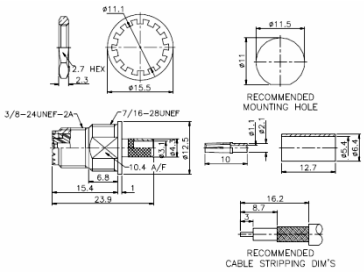  |
| MINI UHF PLUG<br>CRIMP<br>STRAIGHT | | MINI UHF JACK<br>CRIMP<br>BULKHEAD | |

| | | RMUJB01 | DIMENSIONS |
|---|---|---|---|
| | | | 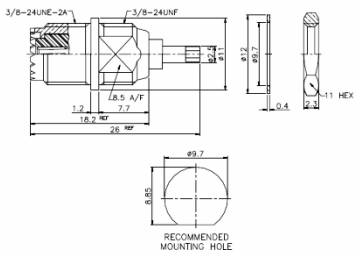  |
| | | MINI UHF JACK<br>BULKHEAD<br>STRAIGHT | |

| | | RAMUJ9MUJ | DIMENSIONS |
|---|---|---|---|
| | | | 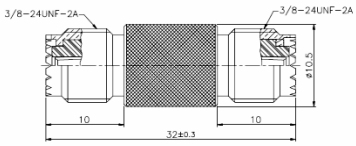  |
| | | MINI UHF ADAPTOR<br>JACK TO JACK<br>STRAIGHT | |